FIRSTINFO
FIT YOUR NEEDS

良匠工具
FIRSTINFO TOOLS



1 & 1.1 Liter Pneumatic Brake Fluid Vacuum Bleeder

MODEL NO.
A1157(K) / US / EU
A11573 / US / EU

Safety Instruction (安全規範)

Please follow all workshop safety rules, regulations, and conditions as below when using our air tools

- **ALWAYS** inspect the tool and parts before use, replacing all the defective parts. Defective parts may create a danger. Unauthorized components may also cause a malfunction and will invalidate the warranty.
- **WARNING!** Use of incorrect size or type of attachments suitable for our tools may cause a hazard or a unstable working environment. Please choose correct size or type of attachments before using.
- **WARNING!** Applying too much force to the tool or parts may lead to lack of control. Increased vibration, or failure of components, which may cause injury.
- **DO NOT** use the tool if any part is missed or damaged because it may cause a malfunction or personal injury.
- 使用前檢視工具零件是否毀損，務必更換。使用未經授權非此款工具的原廠零件，可能造成無法運作，不列入保固範圍。使用不符合或不正確尺寸型號的非此款工具所附的配件，可能會造成危險。操作時若過度用力，或零件遺失或毀損時仍使用此工具，可能造成傷害。

- **ALWAYS** keep the air hose away from heat, oil and sharp edges. Check air hose before using and ensure that all connections are secure.
- **ALWAYS** blow out the air hose before connecting it to the tool. This action will ensure that there is no unnecessary water or debris inside the hose.
- **ALWAYS** be sure to disconnect the tool from air supply after each use, DO NOT carry tool by air hose or yank the hose from air supply as the tool may start accidentally and cause damage to the tool.
- **DO NOT** use frayed, damaged or deteriorated air hoses and fittings as injury may occur from free discharge of pressurized air or whipped hose. ALWAYS inspect for damaged or loose hoses and fittings.
- **WARNING!** Please fully depressurize air supply or disconnect from air compressor before changing, adjusting and maintaining.
- **WARNING!** Always ensure that the compressor is set at the correct air pressure. Operator must notice that the pressure is maintained and not exceeded.
- **DO NOT** point the compressed air to people, animals, or blow dust off your clothes directly. Compressed air may create a danger.
- 空壓軟管務必遠離高溫與尖銳處，使用前確保連接處安全。且勿使用受磨損或品質不良的空壓軟管，會導致軟管毀損，導致受傷。調整更換配件或維護前，務必完全洩壓或將工具與空壓機分離。操作時務必確認壓力需維持在設定區間及不可超出最大值。請勿將加壓過的空氣指向人體或動物，可能導致受傷。

- **ALWAYS** wear correct personal protective accoutrements: like glasses, gloves, mask, hard helmet, ear plugs, shoes or boots when operating air tools.
- **ALWAYS** keep hands/body clear of working parts, remove unnecessary ill-fitting clothing; for example, ties, rings, watches, other loose jewelry etc. or with long hair.
- **ALWAYS** ensure work area provides with firm footings. Cluttered and slippery workplace may cause slipping or tripping and weaken visibility.
- **ALWAYS** keep children and unauthorized persons away from the workplace.
- **ALWAYS** ensure that the workplace is suitable with enough lighting and ventilation and keep it away from unnecessary or any dangerous materials.
- **ALWAYS** place the tool in a safe, dry and childproof location. DO NOT leave the tool unattended.
- **DO NOT** operate the tool when you are fatigued or under the influence of alcohol, medication or drugs. Injury or death may occur.
- 務必穿戴保護配件並卸除身體與手部的不必要首飾配件。潮濕的場所可能導致滑倒，務必穿上止滑鞋。操作場所務必保持整潔。請勿讓孩童或未經授權使用的人員靠近操作場所。務必確認操作環境提供足夠燈光與空氣流通。工具使用後務必妥善保存。處於疲累狀態，或服用含酒精飲料、藥物，切勿操作。

NOTE: It is our duty to keep improving produts and we reserve the right to modify contents, specifications and parts without prior advice.
IMPORTANT: No responsibility is accepted for improper use of product.

886-6-2586129
886-6-2586126
https://www.firstinfo.com.tw
sales@firstinfo.com.tw
@fit-tools
良匠工具 Firstinfotools
良匠工具 Firstinfotools
良匠工具 Firstinfotools

FIRSTINFO
FIT YOUR NEEDS

良匠工具
FIRSTINFO TOOLS

INSTRUCTIONS FOR :
Pneumatic Brake Fluid Vacuum Bleeder
MODEL NO. : A1157(K) / US / EU , A1155
A11573 / US / EU

Features :

1. Universal rubber adapter designed to drain most standard and ABS brake systems.
2. Bleed hydraulic brakes and flush clutches with efficiency on cars, motorcycles, ATVs, trucks, etc.
3. Convenient designs, including hanging hook and locking trigger, spare your hands and require only one person to operate.
4. The vacuum brake bleeder equipped special design in the silicone hose keeps the air from returning into the system when bleeding.
5. The well-designed set collects old fluid in the bleeder, ensuring safe extraction without spillage.
6. Integrated silencer to make a messy job cleaner, quicker and quieter. Also, release the excessive pressure automatically.
7. Lightweight for easy and convenient to carry.
8. Working pressure : 40-170 PSI

產品特色 :

1. 通用橡膠接頭可用於大部分標準及ABS煞車系統。
2. 可用於一般汽車、機車、沙灘車及卡車等的液壓煞車及離合器。
3. 掛勾及手柄金屬扣環設計，方便一人操作洩油作業。
4. 特殊設計矽膠管可防止洩油時空氣進入煞車系統。
5. 油桶設計可收集舊油，避免溢出汙染工作環。
6. 內建消音器可自動調節過高的空壓及降低噪音。
7. 瓶身輕巧便於操作及拿取。
8. 工作壓力：40~170PSI

商品説明 :

1. ほとんどの車種に適合する汎用アダプタ付き。
2. 車(ABS 車含む)、バイク、トラック、オートバイなどに適しています。
3. ハンズフリー操作を実現。引き金を固定して自動的に抽出し続けることができます。
4. エアとオイルの逆流を防止するワンウェイバルブ付き。
5. 安全装置で満タンに達すると自動停止します。
6. サイレンサーにより静かに作業ができます。
7. 軽量化デザイン、持ち運びに最適。
8. 作業圧力範囲：0.28～1.17 MPa

Item no.A1157/US/EU



Item no.A1157K/US/EU



Item no.A11573/US/EU



Item no.A1155

(1L Refilling Bottle w/ PU Extension Hose)



NOTE: It is our duty to keep improving produts and we reserve the right to modify contents, specifications and parts without prior advice.
IMPORTANT: No responsibility is accepted for improper use of product.

886-6-2586129
886-6-2586126
https://www.firstinfo.com.tw
sales@firstinfo.com.tw
@fit-tools
良匠工具 Firstinfotools
良匠工具 Firstinfotools
良匠工具 Firstinfotools

FIRSTINFO
FIT YOUR NEEDS

良匠工具
FIRSTINFO TOOLS

INSTRUCTIONS FOR :
Pneumatic Brake Fluid Vacuum Bleeder
MODEL NO. : A1157(K) / US / EU , A1155
A11573 / US / EU

Instruction: (A1157K:1~7 ; A1157,A11573: 1,3,4,5,6,7 ; A1155:2,3,7)

1. Remove the rubber adapter from the bleeding hose. Put the hose into the reservoir to extract all the brake fluid from the master cylinder. (Fig.1)
2. Fill the refilling bottle with the new brake fluid and turn off the valve on the bottle.
   (The refilling bottle is optional, model no. A1155)
3. Set up the refilling bottle and fix it on the master cylinder reservoir to refill. Open the valve and keep the master cylinder topped off at all times. The new brake fluid will be filled automatically during extraction. (Fig.2)

   Notice: Keep the reservoir filled all the time in case the air goes into the brake system.

   Notice: Refilling bottle is only included in model no. A1157K. If the kit you purchased doesn't include the refilling bottle, such as model no. A1157, A11573, just set up any refilling device to keep the reservoir filled and always notice the master cylinder is topped off while extraction.
4. Remove the dust cap on the bleeder screw, putting the universal rubber adapter on the brake nipple to connect the bleeder kit with the caliper. Loosen the bleeder screw with a wrench. (Fig.3)

   Notice: Applying some grease to the joint makes it seal better.

   Notice: Suggested bleeding order is to start from the caliper farthest from the master cylinder.
5. Connect the bleeder kit to the air compressor. Press the trigger to start bleeding.
   - Use the ring to lock the trigger instead of holding it. (Fig.4-1)

   Notice: For model no. A11573, just turn on the air valve to start bleeding after connecting to the air compressor. (Fig.4-2)
6. Keep bleeding until the brake fluid is coming out lightly and cleanly. Tighten the bleeder screw and loosen the hook ring to stop the extraction.

   Suggestion: If your bleeding hose kept getting bubbles mixed in with brake fluid when extracting, the main problem is the air gets sucked in through the threads on the bleeder screw. The solution is to put Teflon tape or PTFE thread sealant on the threads.
7. Remove the rubber adapter and put the dust cap back on, turn off the valve of the refilling bottle and remove it.



Fig.1



Fig.2 (Model no. A1155)

NOTE: It is our duty to keep improving produts and we reserve the right to modify contents, specifications and parts without prior advice.
IMPORTANT: No responsibility is accepted for improper use of product.

886-6-2586129
886-6-2586126
https://www.firstinfo.com.tw
sales@firstinfo.com.tw
@fit-tools
良匠工具 Firstinfotools
良匠工具 Firstinfotools
良匠工具 Firstinfotools

FIRSTINFO
FIT YOUR NEEDS

良匠工具
FIRSTINFO TOOLS

INSTRUCTIONS FOR :
Pneumatic Brake Fluid Vacuum Bleeder
MODEL NO. : A1157 (K) / US / EU , A1155
A11573 / US / EU

操作指示 : (A1157K: 1~7 ; A1157,A11573: 1,3,4,5,6,7 ; A1155:2,3,7)

1. 將剎車油管上的橡膠接頭先拆下，再將剎車油管放入剎車總泵油槽上油杯中，抽出主缸外油杯內的剎車油。 (Fig.1)
2. 將自動補充瓶 (產品編號: A1155) 裝滿所需量的新剎車油，並將考克開關先調至關閉位置。
3. 接著將補充瓶固定於剎車總泵油槽的油杯上，打開考克開關開始補充，使剎車總泵隨時充滿油。(抽油過程中會邊抽取邊自動補充) (Fig.2)

   注意 : 此步驟為避免空氣跑進剎車系統。

   注意 : 補充瓶只有產品 A1157K 有附，若您購買的產品組合為無補充瓶的 A1157、A11573，可使用任何的補充設備進行此補充添加步驟即可，抽取過程中需隨時注意適時自行手動補充油杯內的新剎車油。
4. 將洩油螺絲上的防塵蓋移開，再將剎車油管上的橡膠接頭接上洩油嘴以連接抽油機與剎車分泵。確認接好之後即可使用扳手轉開洩油螺絲。 (Fig.3)

   注意 : 在連接處塗一些潤滑油，使其密封性更好。

   注意 : 建議可從離剎車總泵較遠的分泵開始進行抽油。
5. 將抽油機接上空壓機，按壓擊發手柄開始抽油 (可將扣環扣住代替手握)。(Fig.4-1)

   注意 : 針對款式A11573，接上空壓機後，只需打開進氣開關即可開始抽油。(Fig.4-2)
6. 當抽出的剎車油顏色較淺及乾淨時，代表新油開始被抽出，即可轉緊洩油螺絲並鬆開扣環停止抽取。

   建議 : 若您抽油時，發現剎車油管中有氣泡，表示有空氣從洩油螺絲處被吸入，並隨著髒油一併被帶入剎車油管。可使用止洩帶 (Tape Seal) 纏在洩油螺絲的螺牙上，即可防止空氣被吸入。
7. 將橡膠接頭移除並蓋上防塵蓋，關閉自動補充瓶的考克開關並移除補充瓶，抽油即完成。





Universal rubber adapter suitable to drain most standard & ABS brake systems.

Fig.3



Fig.4-1 (Model no. A1157)

NOTE: It is our duty to keep improving produts and we reserve the right to modify contents, specifications and parts without prior advice.
IMPORTANT: No responsibility is accepted for improper use of product.

886-6-2586129
886-6-2586126
https://www.firstinfo.com.tw
sales@firstinfo.com.tw
@fit-tools
良匠工具 Firstinfotools
良匠工具 Firstinfotools
良匠工具 Firstinfotools
MIT FIRSTINFO

FIRSTINFO
FIT YOUR NEEDS

良匠工具
FIRSTINFO TOOLS

INSTRUCTIONS FOR :
Pneumatic Brake Fluid Vacuum Bleeder
MODEL NO. : A1157(K) / US / EU , A1155
A11573 / US / EU

操作説明 : (A1157K: 1~7 ; A1157,A11573: 1,3,4,5,6,7 ; A1155: 2,3,7)

1. 汎用アダプタを取り外し、リザーバータンクにホースを入れて古いブレーキフルードを抜きます。（図 1）
2. 補充器に新しいブレーキフルードを入れます。
3. リザーバタンクに補充器を固定し、レバーを引いて新しいブレーキフルードを補充します。（図 2）

   注意 : エアーが混入しないため、必ずリザーバタンクが空にならないように補充をしてください。

   注意 : A1157Kには補充器が付属しております。
   A1157、A11573を購入する場合、別の補充器を使っても構いません。
4. ブリーダープラグがらキャップを取り外し、ホースを接続します。
   レンチでブリーダープラグを緩めます。（図 3）

   注意 : マスターシリンダーから一番遠いキャリパーから始めます。

   アドバイス : 気密性を高めるには、接続部にグリスを塗布することはおすすめします。
5. ブレーキブリーダーをコンプレサーに接続し、
   引き金やレバーを引いてブレーキフルードを抜きます。（図 4-1）

   注意 : A11573はレバーを引くと自動的に抽出します。（図4-2）
6. 排出されるオイルがきれいになったら、ブリーダープラグを締めます。

   アドバイス : エア噛みが起きている場合、ブリーダープラグにシールテープを巻いて隙間を埋めてください。
7. ホースを取り外し、ダストキャップを元に戻します。補充器を取り外して作業を終わりにします。



Press the trigger to start bleeding - Use the ring to lock the trigger instead of holding it.



Turn on the air valve to start bleeding.

Fig.4-2（Model no. A11573）

NOTE: It is our duty to keep improving produts and we reserve the right to modify contents, specifications and parts without prior advice.
IMPORTANT: No responsibility is accepted for improper use of product.

886-6-2586129
886-6-2586126
https://www.firstinfo.com.tw
sales@firstinfo.com.tw
@fit-tools
良匠工具 Firstinfotools
良匠工具 Firstinfotools
良匠工具 Firstinfotools

FIRSTINFO
FIT YOUR NEEDS

良匠工具
FIRSTINFO TOOLS

INSTRUCTIONS FOR :
Pneumatic Brake Fluid Vacuum Bleeder
MODEL NO. : A11573 / US / EU

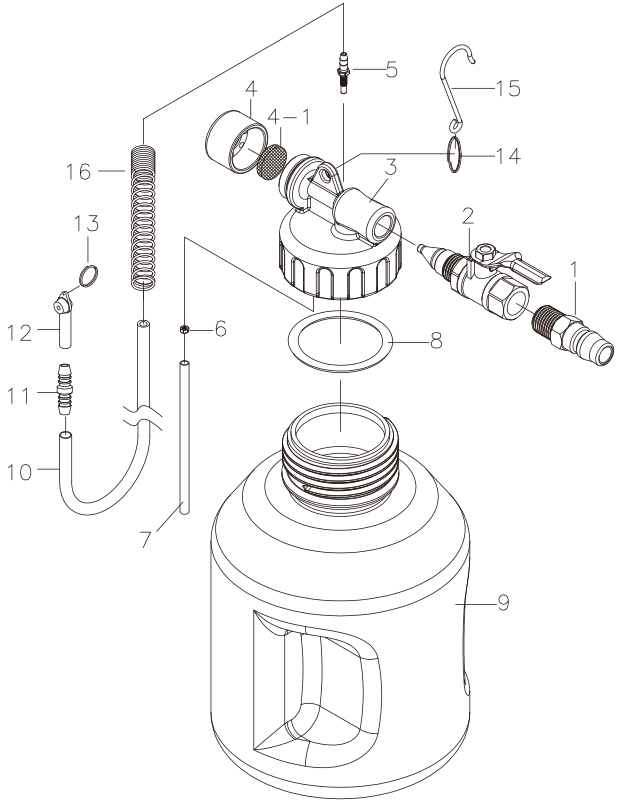

Parts List

Index No.	Parts No.	Q'ty Req	Description
1	A11573-1	1	Coupler
2	A11573-2	1	Valve
3	A11573-3	1	Vacuum Body
4	A11573-4	1	Noise-Reduction Net
4-1	A11573-4-1	1	Silencer
5	A11573-5	1	Adapter
6	A11573-6	1	Nut
7	A11573-7	1	Tube
8	A11573-8	1	Packing

Index No.	Parts No.	Q'ty Req	Description
9	A11573-9	1	Tank
10	A11573-10	1	Silicon Hose
11	A11573-11	1	Adapter
12	A11573-12	1	Brake Coupler
13	A11573-13	1	Key Ring
14	A11573-14	1	Key Ring
15	A11573-15	1	Hook
16	A11573-16	1	Spring

NOTE: It is our duty to keep improving produts and we reserve the right to modify contents, specifications and parts without prior advice.
IMPORTANT: No responsibility is accepted for improper use of product.

886-6-2586129
886-6-2586126
https://www.firstinfo.com.tw
sales@firstinfo.com.tw
@fit-tools
良匠工具 Firstinfotools
良匠工具 Firstinfotools
良匠工具 Firstinfotools

FIRSTINFO
FIT YOUR NEEDS

良匠工具
FIRSTINFO TOOLS

INSTRUCTIONS FOR :
Pneumatic Brake Fluid Vacuum Bleeder
MODEL NO. : A1157(K) / US / EU , A1155

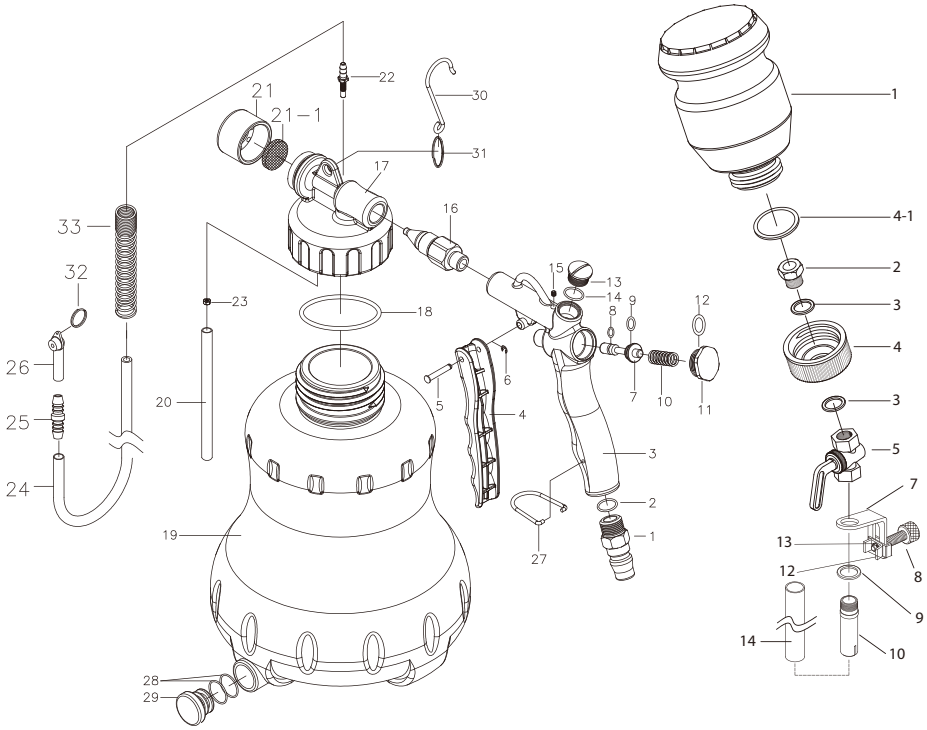

A1157 Parts List

Index No.	Parts No.	Q'ty Req	Description	Index No.	Parts No.	Q'ty Req	Description
1	A1157-1	1	Coupler	18	A1157-18	1	Packing
2	A1157-2	1	O Ring	19	A1157-19	1	Tank
3	A1157-3	1	Body	20	A1157-20	1	Tube
4	A1157-4	1	Trigger	21	A1157-21	1	Noise-Reduction Net
5	A1157-5	1	Fix Shaft	21-1	A1157-21-1	1	Silencer
6	A1157-6	1	E Lock	22	A1157-22	1	Adapter
7	A1157-7	1	Valve Stem	23	A1157-23	1	Nut
8	A1157-8	1	O Ring	24	A1157-24	1	Silicon Hose
9	A1157-9	1	O Ring	25	A1157-25	1	Adapter
10	A1157-10	1	Spring	26	A1157-26	1	Brake Coupler
11	A1157-11	1	Screw	27	A1157-27	1	Hook
12	A1157-12	1	O Ring	28	A1157-28	2	O Ring
13	A1157-13	1	Screw	29	A1157-29	1	Oil Outlet Cover
14	A1157-14	1	O Ring	30	A1157-30	1	Hook
15	A1157-15	1	Screw	31	A1157-31	1	Key Ring
16	A1157-16	1	Vacuum Inlet	32	A1157-32	1	Key Ring
17	A1157-17	1	Vacuum Body	33	A1157-33	1	Spring

A1155 Parts List

Index No.	Parts No.	Q'ty Req	Description
1	A1155-1	1	Tank
2	A1155-2	1	Screw
3	A1155-3	2	Washer
4	A1155-4	1	Cover Housing
4-1	A1155-4-1	1	Packing
5	A1155-5	1	Valve
7	A1155-7	1	Swivel Clamp
8	A1155-8	1	Adjustment Screw
9	A1155-9	1	Washer
10	A1155-10	1	Oil Outlet Screw
12	A1155-12	1	Washer
13	A1155-13	1	C Lock
14	A1155-14	1	PU Hose

NOTE: It is our duty to keep improving produts and we reserve the right to modify contents, specifications and parts without prior advice.
IMPORTANT: No responsibility is accepted for improper use of product.

886-6-2586129
886-6-2586126
https://www.firstinfo.com.tw
sales@firstinfo.com.tw
@fit-tools
良匠工具 Firstinfotools
良匠工具 Firstinfotools
良匠工具 Firstinfotools

FIRSTINFO
FIT YOUR NEEDS

良匠工具
FIRSTINFO TOOLS

INSTRUCTIONS FOR :
Pneumatic Brake Fluid Vacuum Bleeder
MODEL NO. : A1157(K) / US / EU

Please refer to the diagram for instructions on opening and closing the top cover of the pneumatic brake fluid vacuum bleeder.

請參照圖示開關氣動剎車油吸取器的上蓋

上下部の開閉作業時の正しい握り位置

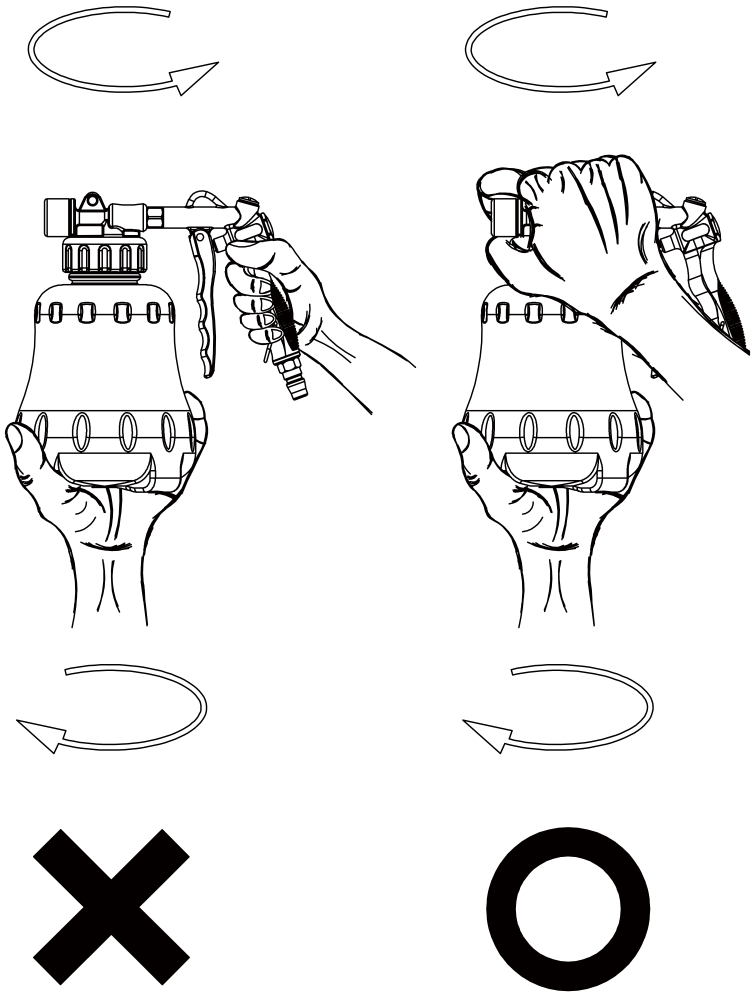

NOTE: It is our duty to keep improving produts and we reserve the right to modify contents, specifications and parts without prior advice.
IMPORTANT: No responsibility is accepted for improper use of product.

886-6-2586129
886-6-2586126
https://www.firstinfo.com.tw
sales@firstinfo.com.tw
@fit-tools
良匠工具 Firstinfotools
良匠工具 Firstinfotools
良匠工具 Firstinfotools